DC Motor Replacement

This repair will require removal of the unit from it's mounting hardware and repair made on a bench or floor. Refer to your Owners Manual/Installation Poster for proper assembly and carefully read and understand all warnings and cautions pertaining to your unit.

⚠ WARNING
BE SURE ELECTRICAL POWER HAS BEEN DISCONNECTED FROM THE INPUT POWER LINES PRIOR TO REMOVING THE MOTOR COVER.

⚠ WARNING
ANY AND ALL REPAIRS MADE TO THIS UNIT MUST BE PERFORMED WITH THE DOOR DISCONNECTED FROM THE OPENER AND IN THE CLOSED POSITION.

1. Pull emergency release cord on carriage to disengage opener to close door if necessary. (If unable to lower door using opener, use extreme caution manually closing door. Before pulling emergency release cord, make certain people and objects are clear of door opening.)
2. Unplug opener power cord from power receptacle.
3. Open lens cover by pressing middle tab inward and remove light bulbs. FIG. 1.
4. Remove wall control and Safe-T-Beam wires from terminal block located on side of opener FIG. 1. Use small common screwdriver to press in on orange tabs while gently pulling wires from block. Mark wires to help facilitate replacement.
5. Unplug optional battery backup harness if applicable.
6. Remove opener and rail assembly from garage and door hardware and lay on a clean flat work surface.
7. Remove 4 -7/16 bolts securing rail to powerhead and remove rail.
8. Remove two 5/16" screws securing powerhead cover to chassis. FIG. 2.

FIG. 1.

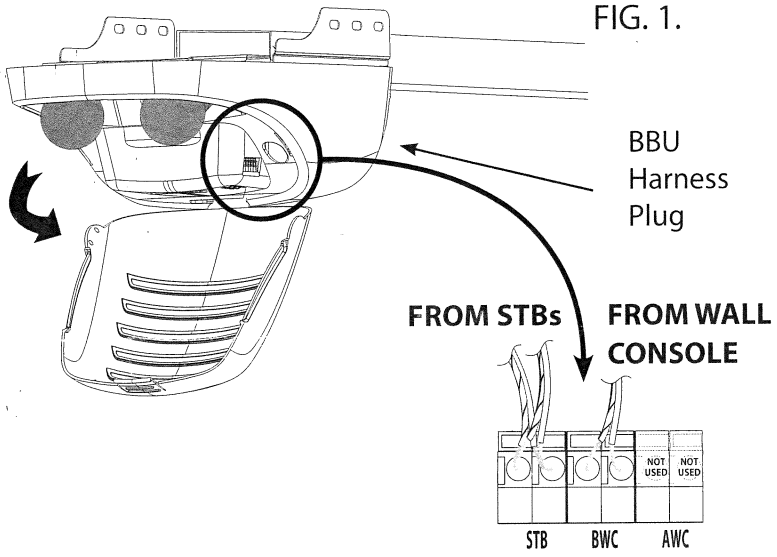

FIG. 2.

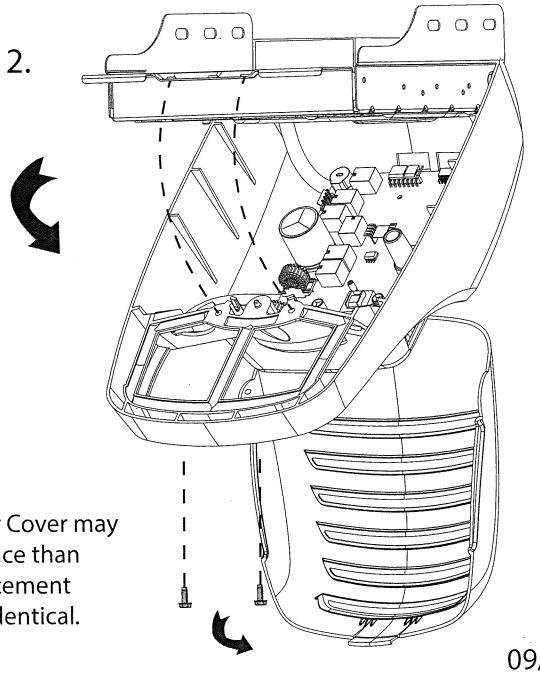

NOTE: Your Motor Cover may differ in appearance than illustrated. Replacement instructions are identical.

9. Allow the motor cover to swing down to access control board and wire harnesses.
10. **UNPLUG THE FOLLOWING HARNESSES/WIRE FROM CONTROL BOARD/CHASSIS. FIG. 3.**
    - Motor harness
    - Opto harness (DO NOT remove from motor)
    - Power Cord harness (AC IN)
    - Light socket harness
    - Motion detector harness (if equipped)
    - Green Gound wire from chassis (if equipped)
11. Powerhead cover can now be removed from opener chassis for repair. Special care should be taken to prevent damage to motion detector bulb located on bottom of motor cover. (If equipped).

FIG. 3.

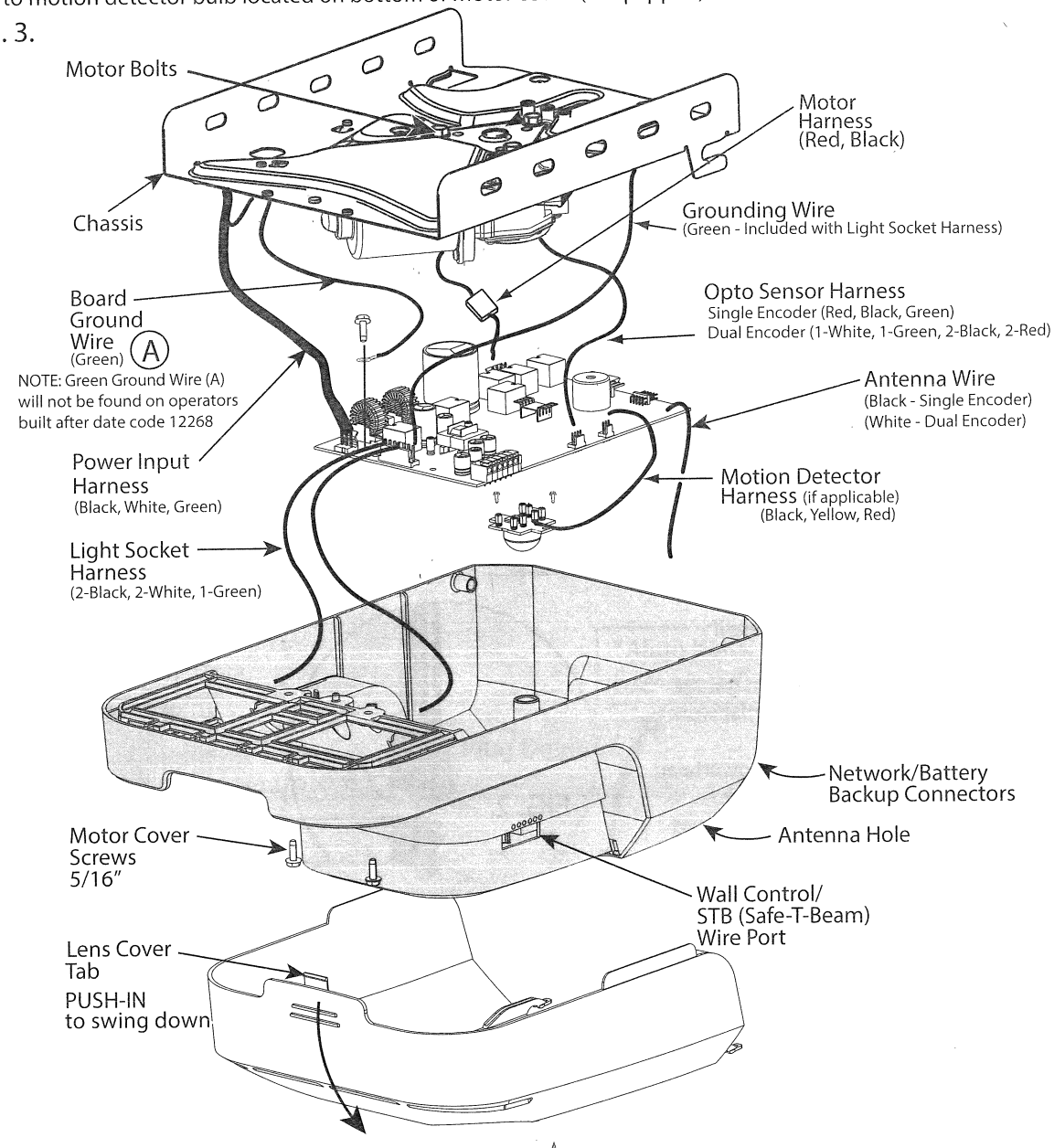

NOTE: Your Motor Cover may differ in appearance than illustrated. Replacement instructions are identical.

12. **REMOVE AND REPLACE MOTOR ASSEMBLY: FIG 4.**
- Remove 3 mounting bolts from top of opener chassis.
- Remove motor assembly.
- Replace motor assembly in reverse order.

FIG. 4.

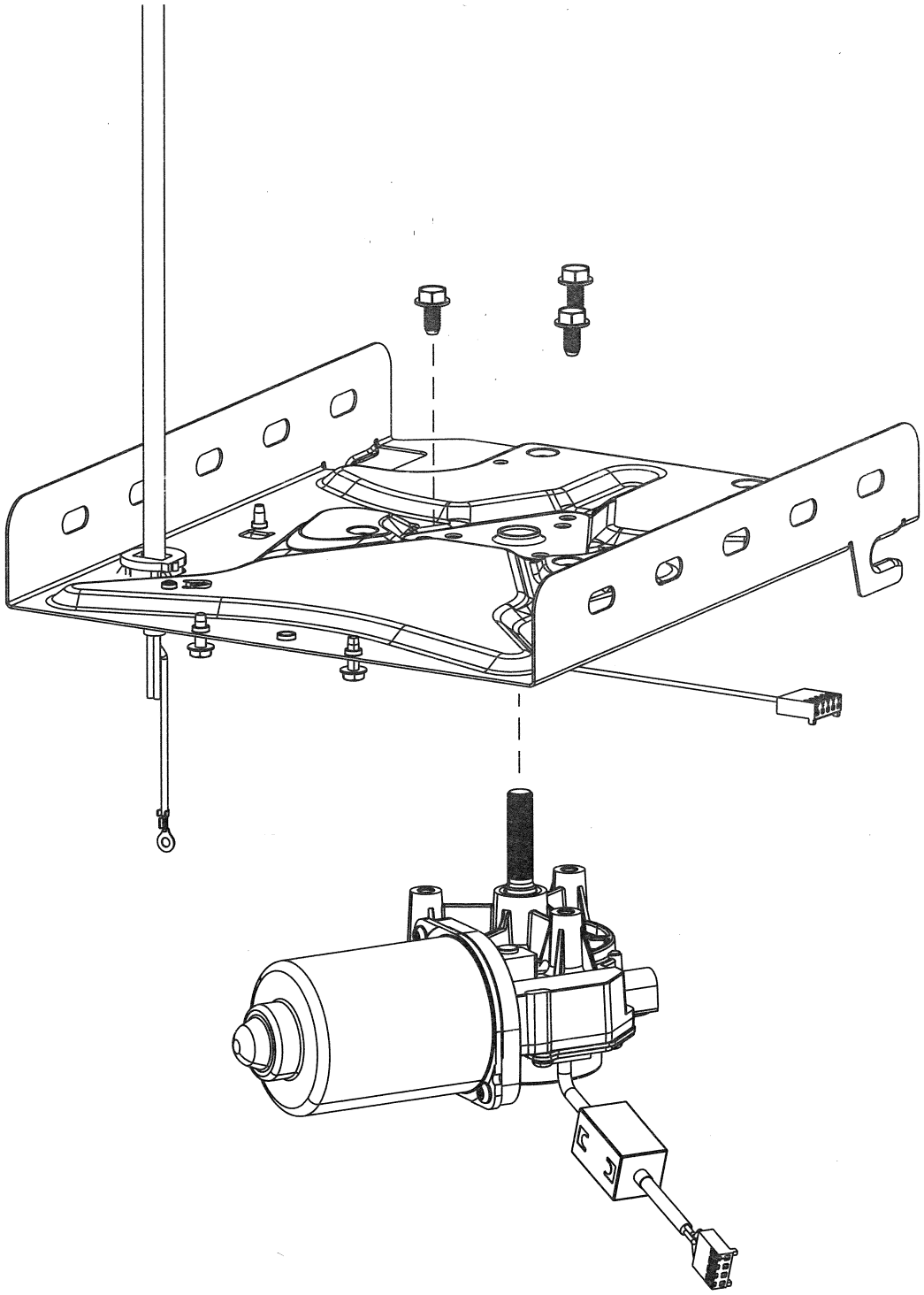

13. Install all parts and harnesses in reverse order:
- Light socket harness
- Motor harness
- Opto harness
- Power Cord harness (AC IN)

Note: *Be certain to install all harnesses in the correct position being sure to install with locking tabs facing each other. FIG 5. Carefully align pins with plug, DO NOT bend pins or force plugs.*

14. Install cover assembly to chassis.
15. Swing powerhead cover up onto chassis and secure using screws removed in step 6.
16. Install rail assembly to powerhead.
17. Reinstall opener to garage hardware and door.
18. Install wall control and Safe-T-Beam wires. Install battery backup harness (if applicable).
19. Install light bulbs and close lens cover.
20. Reapply power to opener.
21. Program up and down limit settings
22. A full function test will be required. Refer to owners manual for detailed information.

FIG. 5

